SIEMENS

# Washing machine

WM14N02LDN

**en** User manual and assembly instructions

**Register your product on My Siemens and discover exclusive services and offers.**
siemens-home.bsh-group.com/welcome

**The future moving in.**

**Siemens Home Appliances**

# Table of contents

**Safety ..... 4**
General information ..... 4
Intended use ..... 4
Restriction on user group ..... 5
Safe installation ..... 5
Safe use ..... 7
Safe cleaning and maintenance ..... 9

**Preventing material damage ..... 11**

**Environmental protection and saving energy ..... 12**
Disposing of packaging ..... 12
Save energy and conserve resources ..... 12
Energy saving mode ..... 13

**Installation and connection ..... 13**
Unpacking the appliance ..... 13
Contents of package ..... 14
Requirements for the installation location ..... 14
Removing the transit bolts ..... 15
Connecting the appliance ..... 17
Aligning the appliance ..... 18

**Familiarising yourself with your appliance ..... 19**
Appliance ..... 19
Detergent drawer ..... 20
Controls ..... 20

**Display ..... 21**

**Buttons ..... 23**

**Programmes ..... 24**

**Accessories ..... 27**

**Before using for the first time ..... 27**
Starting an empty washing cycle ... 27

**Laundry ..... 28**
Preparing the laundry ..... 28
Sorting laundry ..... 29
Degrees of soiling ..... 29
Care symbols on the care labels ... 29

**Detergents and care products ..... 30**
Detergent recommendation ..... 30
Detergent dosage ..... 31

**Basic operation ..... 32**
Switching on the appliance ..... 32
Setting a programme ..... 32
Adjusting the programme settings ..... 32
Loading laundry ..... 32
Using a measuring aid for liquid detergent ..... 33
Adding detergent and care product ..... 33
Starting the programme ..... 33
Adjusting the "Ready in" time before the programme starts ..... 34
Soaking laundry ..... 34
Adding laundry ..... 34
Cancelling the programme ..... 34
Resuming the programme when the programme status is Rinse Hold ..... 34
Unloading the laundry ..... 34
Switching off the appliance ..... 35

**Childproof lock ..... 35**
Activating the childproof lock ..... 35
Deactivating the childproof lock ..... 35

**Basic settings ..... 36**
Overview of the basic settings ..... 36
Changing the basic settings ..... 37

**Cleaning and servicing ..... 37**
Tips on appliance care ..... 37
Cleaning the drum ..... 37
Cleaning the detergent drawer ..... 37
Descaling ..... 38

Cleaning the drain pump..... 39
Cleaning the water outlet hose at the siphon..... 41
Clean the water inlet filters..... 42

**Troubleshooting..... 44**
Error code / Fault display / Signal..... 44
Malfunctions ..... 45
Noise ..... 48
Problem with results..... 48
Leakage..... 49
Odours..... 50
Emergency release ..... 51

**Transportation, storage and disposal ..... 51**
Removing the appliance ..... 51
Inserting the transit bolts..... 51
Using the appliance again ..... 52
Disposing of old appliance ..... 52

**Customer Service..... 53**
Product number (E-Nr.) and production number (FD)..... 53

**Consumption values..... 54**

**Technical specifications..... 54**

# Safety

Please read the safety information to ensure that you use the appliance safely.

General information

You can find general information about this instruction manual here.

- Read this instruction manual carefully. Only this will ensure you use the appliance safely and efficiently.
- This manual is intended for the installer and the user of the appliance.
- Follow the safety instructions and warnings.
- Keep the instruction manual and the product information safe for future reference or for the next owner.
- Check the appliance after unpacking it. Do not connect the appliance if it has been damaged in transit.

## Intended use

Read the information on intended use to ensure that you use the appliance correctly and safely.

Only use this appliance:

- According to this installation and instruction manual.
- For washing machine-washable fabrics and hand-washable wool in accordance with the care label.
- With tap water and commercially available detergents and care products suitable for washing machines.
- In private households and in enclosed spaces in a domestic environment.
- Up to an altitude of max. 4000 m above sea level.

## Restriction on user group

Avoid risks to children and vulnerable persons.
This appliance may be used by children aged 8 or over and by people who have reduced physical, sensory or mental abilities or inadequate experience and/or knowledge, provided that they are supervised or have been instructed on how to use the appliance safely and have understood the resulting dangers.
Children must not play with the appliance.
Cleaning and user maintenance must not be performed by children unless they are being supervised.
Keep children under the age of 3 years and pets away from the appliance.

## Safe installation

Take note of the safety instructions when installing the appliance.

**⚠ WARNING – Risk of electric shock!**

- Improper installation is dangerous.
  - ▶ Connect and operate the appliance only in accordance with the specifications on the rating plate.
  - ▶ Connect the appliance to a power supply with alternating current only via a properly installed socket with earthing.
  - ▶ The protective conductor system of the domestic electrical installation must be properly installed. The installation must have a sufficiently large cross section.
  - ▶ When using a residual current circuit breaker, only use a type with the ⎓ mark.
  - ▶ Never equip the appliance with an external switching device, e.g. a timer or remote control.
  - ▶ When the appliance is installed, the mains plug of the power cord must be freely accessible. If free access is not possible, an all-pole isolating switch must be installed in the permanent electrical installation according to the installation regulations.
  - ▶ When installing the appliance, check that the power cable is not trapped or damaged.

- If the insulation of the power cord is damaged, this is dangerous.
  - ▶ Never let the power cord come into contact with hot appliance parts or heat sources.
  - ▶ Never let the power cord come into contact with sharp points or edges.
  - ▶ Never kink, crush or modify the power cord.

⚠ **WARNING – Risk of fire!**
It is dangerous to use an extended power cord and non-approved adapters.
- ▶ Do not use extension cables or multiple socket strips.
- ▶ If the power cord is too short, contact Customer Service.
- ▶ Only use adapters approved by the manufacturer.

⚠ **WARNING – Risk of injury!**
- The high weight of the appliance may result in injury when lifted.
  - ▶ Do not lift the appliance on your own.
- If this appliance is not correctly installed in a washer-dryer stack, the installed appliance may fall.
  - ▶ Only stack the dryer on a washing machine using the connection kit from the dryer manufacturer . No other installation method is permitted.
  - ▶ Do not install the appliance in a washer-dryer stack if the dryer manufacturer does not offer a suitable connection kit.
  - ▶ Do not install appliances from different manufacturers and with varying depths and widths in a washer-dryer stack.
  - ▶ Do not install a washer-dryer stack on a platform; the appliances may tip over.

⚠ **WARNING – Risk of suffocation!**
Children may put packaging material over their heads or wrap themselves up in it and suffocate.
- ▶ Keep packaging material away from children.
- ▶ Do not let children play with packaging material.

**⚠ CAUTION – Risk of injury!**

- The appliance may vibrate or move when in use.
  - ▶ Place the appliance on a clean, even, solid surface.
  - ▶ Align the appliance using the appliance feet and a spirit level.
- If hoses and power cords have been laid incorrectly, this causes a tripping hazard.
  - ▶ Lay hoses and power cords in such a way that there is no risk of tripping.
- If the appliance is moved by holding onto protruding components, such as the appliance door, the parts may break off.
  - ▶ Do not move the appliance by holding onto protruding parts.

**⚠ CAUTION – Risk of cutting!**

Touching sharp edges on the appliance may lead to cuts.

- ▶ Do not touch the sharp edges on the appliance.
- ▶ Wear protective gloves when installing and transporting the appliance.

### Safe use

Follow these safety instructions when using the appliance.

**⚠ WARNING – Risk of electric shock!**

- If the appliance or the power cord is damaged, this is dangerous.
  - ▶ Never operate a damaged appliance.
  - ▶ Never pull on the power cord to unplug the appliance. Always unplug the appliance at the mains.
  - ▶ If the appliance or the power cord is damaged, immediately unplug the power cord or switch off the fuse in the fuse box and turn off the water tap.
  - ▶ "Call Customer Service." → *Page 53*
  - ▶ Repairs to the appliance should only be carried out by trained specialist staff.
- An ingress of moisture can cause an electric shock.
  - ▶ Only use the appliance in enclosed spaces.

- ▶ Never expose the appliance to intense heat or humidity.
- ▶ Do not use steam- or high-pressure cleaners, hoses or sprays to clean the appliance.

⚠ **WARNING – Risk of harm to health!**
Children can lock themselves in the appliance, thereby putting their lives at risk.

- ▶ Do not install the appliance behind a door as this may obstruct the appliance door or prevent it from opening.
- ▶ With redundant appliances, unplug the power cord. Then cut through the cord and damage the lock on the appliance door beyond repair so that the appliance door will no longer close.

⚠ **WARNING – Risk of suffocation!**
Children may breathe in or swallow small parts, causing them to suffocate.

- ▶ Keep small parts away from children.
- ▶ Do not let children play with small parts.

⚠ **WARNING – Risk of poisoning!**
Detergents and care products may result in poisoning if consumed.

- ▶ If accidentally swallowed, seek medical advice.
- ▶ Keep detergents and care products out of the reach of children.

⚠ **WARNING – Risk of explosion!**
Laundry that has been pretreated with cleaning agents that contain solvents may cause an explosion in the appliance.

- ▶ Rinse pretreated laundry thoroughly with water before washing.

⚠ **CAUTION – Risk of injury!**

- The covering plate may break if you stand on or climb onto the appliance.
  - ▶ Do not stand on or climb onto the appliance.

- The appliance may tip over if you sit on or lean against the open door.
  - ▶ Do not sit on or lean against the appliance door.
  - ▶ Do not place any objects on the appliance door.
- Reaching into the drum while it is still turning may cause hand injuries.
  - ▶ Wait for the drum to come to a complete stop before reaching inside.

⚠ **CAUTION – Risk of burns!**
When washing at high temperatures, the glass in the appliance door becomes hot.
- ▶ Do not touch the appliance door when it is hot.
- ▶ Keep children away from the appliance door when it is hot.

⚠ **CAUTION – Risk of scalding!**
When you wash at high temperatures, the detergent solution gets hot.
- ▶ Do not touch the hot detergent solution.

⚠ **CAUTION – Risk of chemical burns!**
If the detergent drawer is opened, detergent and care products may spray out from the appliance. Contact with eyes or skin may cause irritation.
- ▶ Rinse eyes and/or skin thoroughly with clean water if they come into contact with detergents or care products.
- ▶ If accidentally swallowed, seek medical advice.
- ▶ Keep detergents and care products out of the reach of children.

### Safe cleaning and maintenance

Take note of the safety instructions when cleaning and performing maintenance work on the appliance.

⚠ **WARNING – Risk of electric shock!**
- Improper repairs are dangerous.
  - ▶ Repairs to the appliance should only be carried out by trained specialist staff.

- ▶ Only use genuine spare parts when repairing the appliance.
- ▶ If the power cord of this appliance is damaged, it must be replaced by the manufacturer, the manufacturer's Customer Service or a similarly qualified person in order to prevent any risk.

■ An ingress of moisture can cause an electric shock.

- ▶ Do not use steam- or high-pressure cleaners, hoses or sprays to clean the appliance.

⚠ **WARNING – Risk of injury!**

The use of non-original spare parts and non-original accessories is dangerous.

- ▶ Only use the manufacturer's original spare parts and original accessories.

⚠ **WARNING – Risk of poisoning!**

Poisonous fumes may be given off if you use cleaning agents that contain solvents.

- ▶ Do not use cleaning agents that contain solvents.

# Preventing material damage

Follow these instructions to avoid material damage and damage to the appliance.

**ATTENTION!**

- The functionality of the appliance may be impaired if you use the wrong quantity of fabric softener, detergent, care product or cleaning agent.
  - ▸ Follow the dosage recommendations from the manufacturer.
- Exceeding the maximum load capacity impairs the function of the appliance.
  - ▸ Observe the "maximum load capacity" → *Page 24* for each programme and do not exceed it.
- The appliance is secured for transportation using transit bolts. Transit bolts which have not been removed may result in material damage and damage to the appliance.
  - ▸ Before starting up the appliance, remove the transit bolts completely and keep them in a safe place.
  - ▸ Before transport, fit the transit bolts fully in order to prevent damage in transit.
- Material damage may be caused if the water inlet hose is connected incorrectly.
  - ▸ Tighten the screw connections on the water inlet until they are hand-tight.
  - ▸ Ideally, connect the water inlet hose directly to the water tap, without any additional connecting elements such as adapters, extensions, valves or similar.
  - ▸ Ensure that the inner diameter of the water tap is at least 17 mm.
  - ▸ Make sure that the length of the thread on the connection to the water tap is at least 10 mm.
- If the water pressure is too high or too low, the appliance may not be able to operate properly.
  - ▸ Make sure that the water pressure in the water supply system is min. 100 kPa (1 bar) and max. 1000 kPa (10 bar).
  - ▸ If the water pressure exceeds the maximum value specified, a pressure-reducing valve must be installed between the drinking water connection and the hose set of the appliance.
  - ▸ Do not connect the appliance to the mixer tap of an unpressurised hot-water boiler.
- Modified or damaged water hoses may result in material damage and damage to the appliance.
  - ▸ Never kink, crush, modify or cut through water hoses.
  - ▸ Only use the water hoses supplied with the appliance or genuine spare hoses.
  - ▸ Never re-use water hoses that have been used before.
- Operating the appliance using water that is dirty or too hot may cause material damage.
  - ▸ Only operate the appliance with cold mains water.
- Unsuitable cleaning products may damage the surfaces of the appliance.
  - ▸ Do not use harsh or abrasive detergents.
  - ▸ Do not use cleaning products with a high alcohol content.
  - ▸ Do not use hard scouring pads or cleaning sponges.
  - ▸ Clean the appliance with nothing but water and a soft, damp cloth.

- ▸ Remove all detergent residue, spray residue or other residues immediately if they come into contact with the appliance.

# Environmental protection and saving energy

Help protect the environment by using your appliance in a way that conserves resources and by disposing of reusable materials properly.

## Disposing of packaging

The packaging materials are environmentally compatible and can be recycled.

- ▸ Sort the individual components by type and dispose of them separately.

  Information about current disposal methods are available from your specialist dealer or local authority.

## Save energy and conserve resources

If you follow these instructions, your appliance will use less electricity and less water.

Choose programmes with low temperatures and longer wash times and use "maximum load capacity" → *Page 24*.

+ Energy consumption and water consumption is most efficient.

"Add " → *Page 31* detergent based on the laundry's degree of soiling.

+ For light to normal soiling, a smaller amount of detergent is sufficient. Observe the dosage recommendation from the detergent manufacturer.

Reduce the washing temperature for lightly and normally soiled laundry.

+ At low temperatures, the appliance consumes less energy. For light to normal soiling, lower temperatures than indicated on the care label are also sufficient.

Set the maximum spin speed if you want to dry the laundry in a tumble dryer afterwards.

+ The drier the laundry, the shorter the programme duration when drying which, in turn, reduces energy consumption. A higher spin speed reduces the residual moisture in the laundry and increases the volume of the spin noise.

Wash the laundry without prewash.

+ Washing with prewash increases the programme duration and increases energy and water consumption.

The appliance has a continuous automatic load adjustment function.

+ Depending on the type of fabric and load capacity, the continuous automatic load adjustment function optimally adjusts the water consumption and programme duration.

### Energy saving mode

If you do not use the appliance for an extended period, it automatically switches to energy-saving mode. All displays go out and ▷II flashes. Energy-saving mode ends when you use the appliance again, e.g. if you open or close the door.

## Installation and connection

You can find out where and how best to install your appliance here. You will also learn how to connect the appliance to the water and power supply.

### Unpacking the appliance

**Note:** Please read the information in the "Safety" → *Page 4* and "Preventing material damage" → *Page 11* sections to ensure that you use the appliance safely.

**ATTENTION!**
Objects remaining in the drum that are not designed for operation with the appliance may cause material damage and damage to the appliance.

- ▶ Remove these objects, along with all supplied accessories, from the drum before starting the appliance.

1. Remove any packaging and protective covers completely from the appliance.

   For the environmentally friendly disposal of the packaging materials, observe the information on the topic of
   → *"Disposing of packaging", Page 12*.
2. Check the appliance for visible damage.
3. Open the door.
   → *"Basic operation", Page 32*
4. Remove the accessory from the drum.
5. Close the door.

## Contents of package

After unpacking all parts, check for any damage in transit and completeness of the delivery.

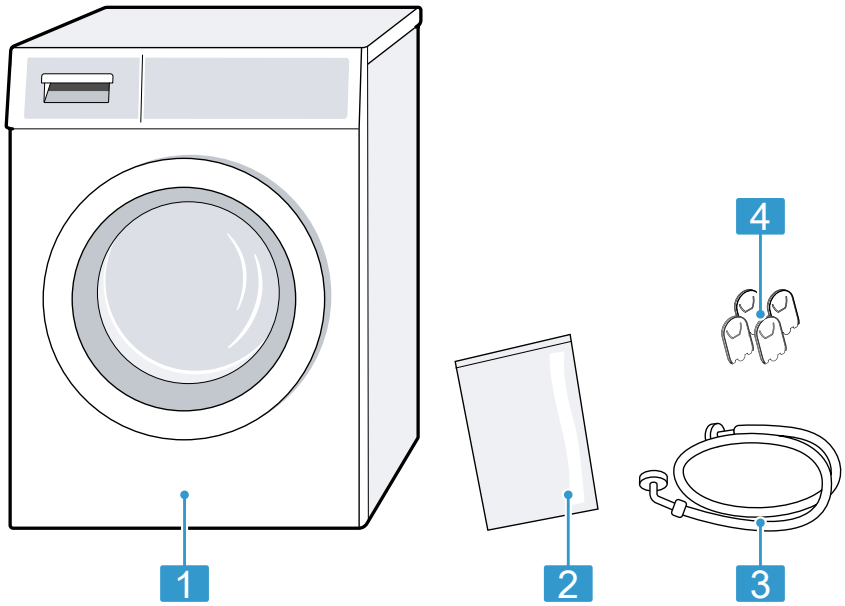


| | |
|---|---|
| 1 | Washing machine |
| 2 | Accompanying documents |
| 3 | Water inlet hose |
| 4 | Cover caps |

## Requirements for the installation location

The appliance may "wander" when it spins. Observe the instructions for the installation location.

**Note:** Please read the information in the "Safety" → *Page 4* and "Preventing material damage" → *Page 11* sections to ensure that you use the appliance safely.

**⚠ WARNING**
**Risk of electric shock!**
The appliance contains live parts. Touching live parts is dangerous.
- ▸ Do not operate the appliance without a cover cap.

**⚠ WARNING**
**Risk of injury!**
When using the appliance on a base, the appliance may tip over.
- ▸ Always secure the feet of the appliance to a base using the manufacturer's "fixing brackets" → *Page 27* before using the appliance for the first time.

**ATTENTION!**
- If the appliance is installed in areas exposed to frost or outdoors, frozen residual water may damage the appliance and frozen hoses may crack or split.
  - ▸ Do not install or operate this appliance anywhere that is liable to experience frost and/or outdoors.
- The appliance underwent a function test before leaving the factory and may, therefore, contain residual water. This residual water may leak out if the appliance is tilted at an angle greater than 40°.
  - ▸ Tilt the appliance carefully.

| Installation location | Requirements |
|---|---|
| On a base 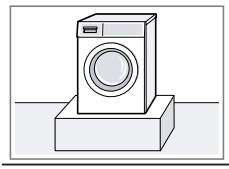 | Secure the appliance with "fixing brackets" → *Page 27*. |
| On a wooden joist floor 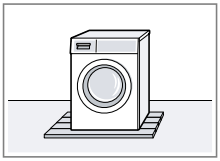 | Place the appliance on a water-resistant wooden board which is screwed tightly to the floor. The wooden board should be at least 30 mm thick. |
| In a kitchen unit 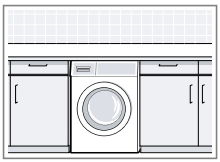 | ■ A niche width of 60 cm is required.<br>■ Only install the appliance underneath a continuous worktop that is securely connected to adjacent cabinets. |
| On a wall 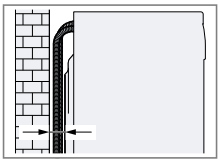 | Do not trap the hoses between the wall and the appliance. |

**Note:** If you want to install the washing machine with a dryer as a washer-dryer stack, your washing machine's worktop must be replaced first.
To replace the worktop, please contact "customer service" → *Page 53*.

## Removing the transit bolts

The appliance is secured for transportation using transit bolts on the rear of the appliance.

**Notes**
- Please read the information in the "Safety" → *Page 4* and "Preventing material damage" → *Page 11* sections to ensure that you use the appliance safely.
- Keep the transit bolts, screws and sleeves in a safe place for future "transport" → *Page 51*.

1. Pull the hoses out of the holders.

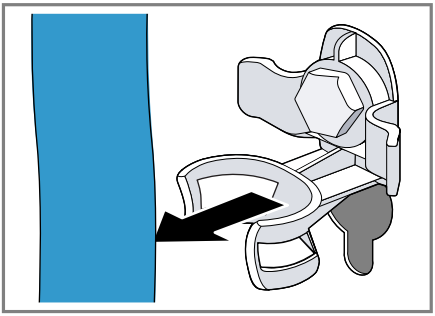

2. Unscrew ① and remove ② all four screws for the transit bolts with a WAF 13 wrench.

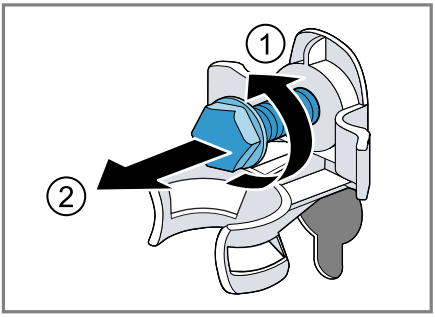


3. Pull the power cord out of the holder.

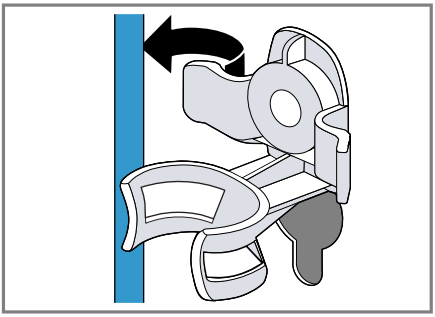

4. Remove the four sleeves.

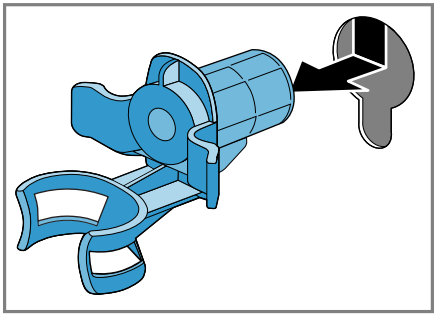

5. Put on the four cover caps.

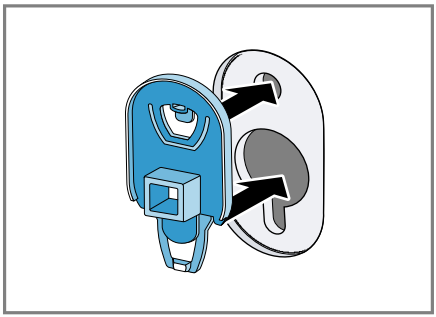

6. Press down on the four cover caps.

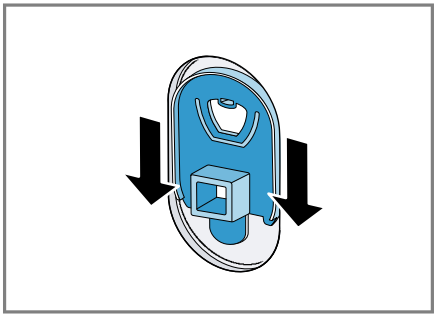

## Connecting the appliance

Connect your appliance to the power supply, water inlet and water outlet.

### Connecting the water inlet hose

**Note**

- Please read the information in the "Safety" → *Page 4* and "Preventing material damage" → *Page 11* sections to ensure that you use the appliance safely.

1. Connect the water inlet hose.

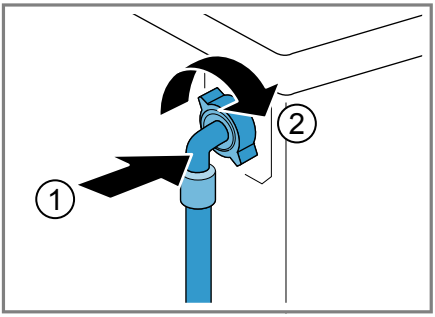


2. Connect the water inlet hose to a tap (26.4 mm = 3/4").

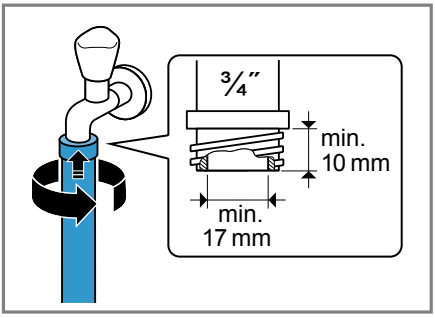


3. Open the water tap carefully and check that the connection points are tight.

### Water outlet connection types

This information is intended to help you to connect this appliance to the water outlet.

**Note:** Please read the information in the "Safety" → *Page 4* and "Preventing material damage" → *Page 11* sections to ensure that you use the appliance safely.

**ATTENTION!**
When draining, the water outlet hose is subject to water pressure and may come loose from the installed connection point.

- ▸ Secure the water outlet hose against unintentional loosening.

| | |
|---|---|
| Drainage into a siphon.<br>Secure the connection point with a (24–40 mm) hose clamp. | 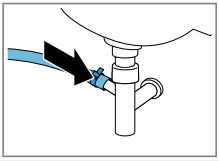 |
| Drainage into a wash basin.<br>Fix and secure the water outlet hose with an "elbow" → *Page 27*. | 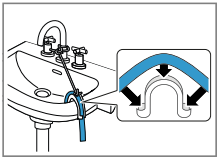 |
| Drainage into a plastic pipe with rubber sleeve.<br>Fix and secure the water outlet hose with an "elbow" → *Page 27*. | 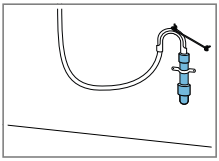 |

### Connecting the appliance to the electricity supply

**Note:** Please read the information in the "Safety" → *Page 4* and "Preventing material damage" → *Page 11* sections to ensure that you use the appliance safely.

1. Insert the mains plug of the appliance's power cable in a socket nearby.

   The connection details of the appliance can be found under "Technical data" → *Page 54*.
2. Check the mains plug is inserted properly.

## Aligning the appliance

In order to reduce noise and vibration and to prevent the appliance from moving, align the appliance correctly.

**Note:** Please read the information in the "Safety" → *Page 4* and "Preventing material damage" → *Page 11* sections to ensure that you use the appliance safely.

1. Loosen the lock nuts using a WAF 17 wrench by turning it in a clockwise direction.

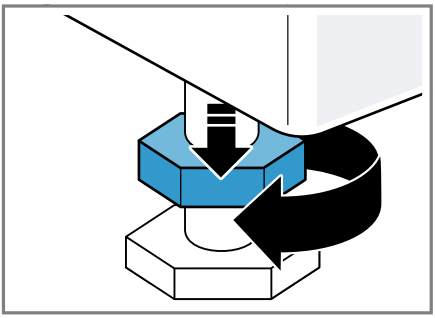

2. To align the appliance, turn the appliance feet. Check that the appliance is level using a spirit level.

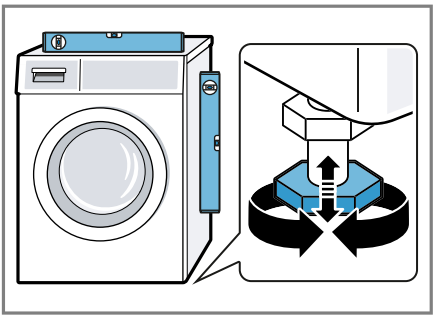

All appliance feet must stand firmly on the ground.

3. Screw the lock nuts tightly against the housing using a WAF 17 wrench.

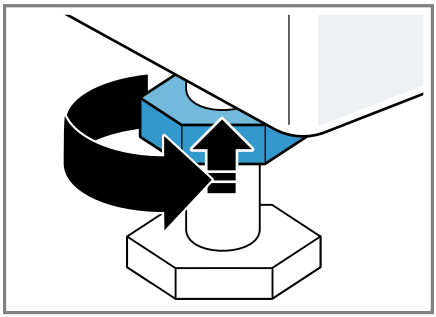

In doing so, hold the foot tight and do not adjust its height.

# Familiarising yourself with your appliance

Familiarise yourself with the parts of your appliance.

## Appliance

You can find an overview of the parts of your appliance here.

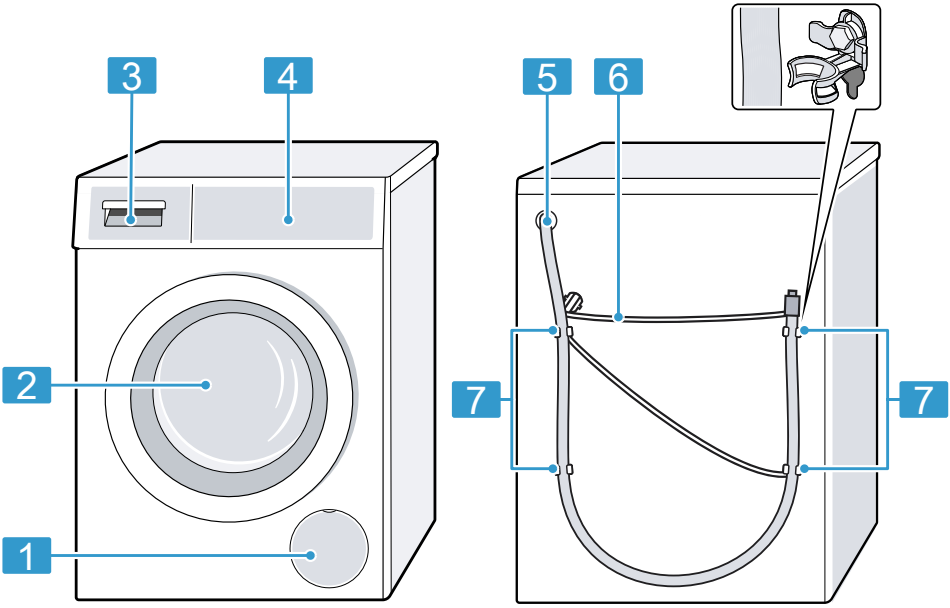


On certain models, specific details such as the colour and shape may differ from those pictured.

| | |
|---|---|
| 1 | "Maintenance flap for the drain pump" → *Page 39* |
| 2 | Door |
| 3 | "Detergent drawer" → *Page 20* |
| 4 | "Controls" → *Page 20* |
| 5 | "Water outlet hose" → *Page 17* |
| 6 | "Power cord" → *Page 17* |
| 7 | "Transit bolts" → *Page 15* |

## Detergent drawer

Below is an overview of the structure of the detergent drawer.

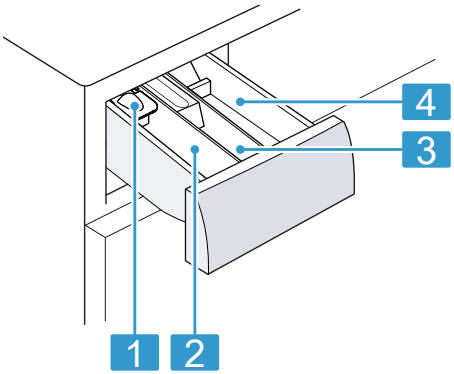


| | |
|---|---|
| 1 | Measuring aid for liquid detergent → *"Using a measuring aid for liquid detergent", Page 33* |
| 2 | Compartment II:<br>■ Detergent for main wash<br>■ Water softener<br>■ Bleach<br>■ Stain remover |
| 3 | Compartment ❀:<br>■ Fabric softener<br>■ Liquid starch<br>■ Waterproofing agent |
| 4 | Compartment I:<br>■ Detergent for prewash<br>■ Hygiene detergent |

## Controls

The controls are used to configure all functions of your appliance and to obtain information about the operating status.

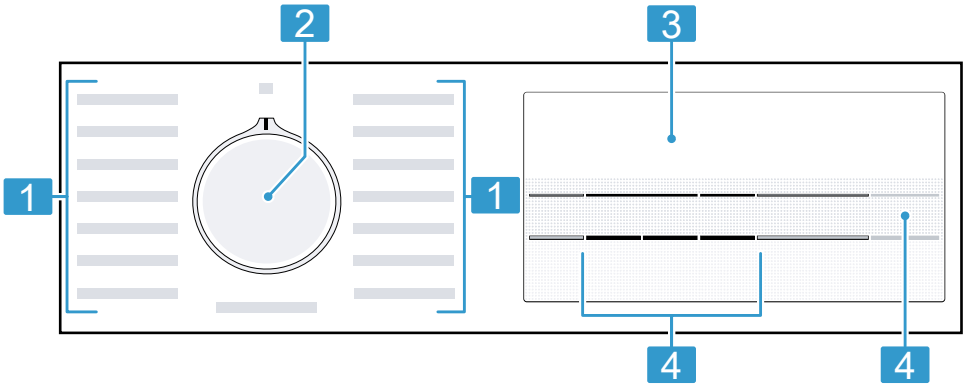


| | |
|---|---|
| 1 | "Programmes" → *Page 24* |
| 2 | "Programme selector" → *Page 32* |
| 3 | "Display" → *Page 21* |
| 4 | "Buttons" → *Page 23* |

# Display

The display shows the current settings, options or relevant information.

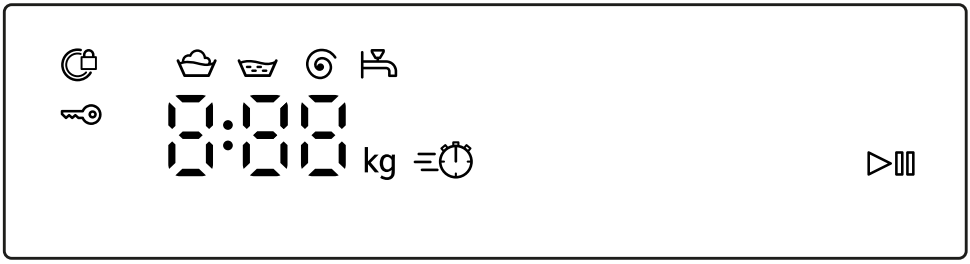


| Display | Designation | Description |
|---|---|---|
| 0:40 [1] | Programme duration/ programme time remaining | Approximate expected programme duration or programme time remaining. |
| 10h [1] | "Ready in" time | The programme end has been set and the remaining number of hours is displayed.<br>→ *"Buttons", Page 23* |
| 7 kg [1] | Recommended load | The maximum load capacity for the selected programme in kg. |
| – – – - 1400 | Spin speed | Set spin speed in rpm.<br>→ *"Buttons", Page 23*<br>0= No final spin, only draining<br>– – –: Rinse Hold, no draining |
| ▷II | Start/Pause | Start, cancel or pause<br>■ Lights up: The programme is running and can be cancelled or paused.<br>■ Flashes: The programme can be started or continued. |
| | Wash | Programme status |
| | Rinse | Programme status |
| | Spin | Programme status |

[1] Example

| Display | Designation | Description |
|---|---|---|
| – – – | Rinse Hold | Programme status |
| End | End of programme | Programme status |
| | Childproof lock | ■ Lights up: The childproof lock is activated.<br>■ Flashes: The childproof lock is active and the programme selector has been adjusted.<br>→ *"Deactivating the childproof lock", Page 35* |
| | varioSpeed | Short wash activated.<br>→ *"Buttons", Page 23* |
| | Door | ■ Lights up: The door is locked and cannot be opened.<br>■ Flashes: The door is not closed properly.<br>■ Off: The door is unlocked and can be opened. |
| | Tap | ■ No water pressure.<br>→ *"Error code / Fault display / Signal", Page 44*<br>■ The water pressure is too low. |
| E:60 / -2B [1] | Error | Error code, error display, signal.<br>→ *"Error code / Fault display / Signal", Page 44* |

[1] Example

# Buttons

Below is an overview of the buttons and their setting options.
The selection of programme settings depends on the selected programme. You can see the selection options for each programme in the overview for
→ *"Programmes", Page 24*.

| Button | Selection | Description |
|---|---|---|
| ▷II | ■ Start<br>■ Cancel<br>■ Pause | Start, cancel or pause the programme. |
| ≈⏱ | ■ Activate<br>■ Deactivate | Activate or deactivate a short washing programme.<br>**Note:** Energy consumption increases. The washing result is not affected by this. |
| ◷ | 1–24 hours | Set the programme end.<br>The programme duration is already included in the set number of hours.<br>Once the programme has started, the programme duration is displayed. |
| ⊛ | – – – 1400 | Adjust the spin speed or activate – –– (Rinse Hold).<br>If – –– is selected, the water is not drained at the end of the washing cycle and the spin cycle is deactivated. The laundry remains in the water used for rinsing. |
| 3 sec. | ■ Activate<br>■ Deactivate | Activate or deactivate the childproof lock.<br>Disable the control panel to prevent unwanted or accidental operation.<br>If the childproof lock is activated and the appliance has been switched off, the childproof lock remains activated.<br>→ *"Childproof lock", Page 35* |

# Programmes

Below is an overview of the programmes. You can find information on the load and on the adjustable programme options.

**Tip:** The laundry's care labels provide you with additional information on programme selection.
→ *"Care symbols on the care labels", Page 29*

| Programme | Description | Max. load (kg) | Program settings | | | |
|---|---|---|---|---|---|---|
| | | | Max. temperature (°C)[1] | Max. spin speed (rpm)[1] | ⏲ | (Rinse Hold) |
| Cotton | Wash hard-wearing items made from cotton, linen or blended fabrics.<br>Also suitable as a short programme for normally soiled laundry when you activate ⏲. If ⏲ is activated, the maximum load capacity is reduced to 4 kg. | 7 | 90 | 1400 | ● | ● |
| Cotton Intensive | Wash hard-wearing items made from cotton, linen or blended fabrics.<br>Energy-saving programme.<br>**Note:** To save energy, the actual washing temperature may deviate from the set washing temperature. The washing performance meets legal requirements. | 7 | 40 | 1400 | – | ● |
| Eco 40-60 | Wash items made from cotton, linen or blended fabrics. Suitable for normally soiled items.<br>**Note:** Textiles which can be washed as per the care symbol 40 at 40 °C or 60 at 60 °C can be washed together. In order to achieve the best possible energy effi- | 7 | - | 1400 | – | ● |

[1] Programme setting

| Programme | Description | Max. load (kg) | Program settings | | | |
|---|---|---|---|---|---|---|
| | | | Max. temperature (°C)[1] | Max. spin speed (rpm)[1] | ⏲ | ⟲ – — (Rinse Hold) |
| | ciency, the optimum washing temperature for this programme was saved.<br>The washing temperature is activated and cannot be changed. | | | | | |
| Cotton + Prewash | Wash hard-wearing items made from cotton, linen or blended fabrics.<br>Programme with prewash for heavily soiled laundry.<br>Divide the detergent between the detergent drawer for the prewash and the main wash.<br>→ *"Detergent drawer", Page 20* | 7 | 40 | 1400 | ● | ● |
| Easy Care | Wash items made from synthetic or blended fabrics. | 4 | 40 | 1200 | ● | ● |
| Mix | Wash items made from cotton, linen, or synthetic or blended fabrics.<br>Suitable for lightly soiled laundry. | 4 | 40 | 1400 | ● | ● |
| Delicate / Silk | Wash delicate, washable items made from silk, viscose and synthetics.<br>Use a detergent that is suitable for delicates or silk.<br>**Note:** Wash especially delicate items or items with hooks, eyelets or clips in a mesh laundry bag. | 2 | 30 | 800 | – | ● |
| Wool | Hand- or machine-washable items that are made from wool or contain wool.<br>To prevent the laundry from shrinking, the drum moves the items very gently with long pauses. | 2 | 30 | 800 | – | ● |

[1] Programme setting

| Programme | Description | Max. load (kg) | Program settings | | | |
|---|---|---|---|---|---|---|
| | | | Max. temperature (°C) [1] | Max. spin speed (rpm) [1] | ⏱ | ⟲ – — (Rinse Hold) |
| | Use a detergent that is suitable for wool. | | | | | |
| Rinse | Rinses and then spins the laundry, and then drains the water. | – | – | 1400 | – | ● |
| Spin / Drain | Spins and drains the water.<br>If you only want to drain the water, activate 0. The laundry is not spun. | – | – | 1400 | – | – |
| Super 15'/30' | Wash items made from cotton, synthetic or blended fabrics.<br>Short programme for small items of lightly soiled laundry.<br>The programme duration is approx. 30 minutes.<br>If you wish to reduce the programme duration to 15 minutes, activate ⏱. The maximum load is reduced to 2 kg. | 4 | 30 | 1200 | ● | ● |

[1] Programme setting

# Accessories

Only use original accessories. These have been made especially for your appliance. Here you can find an overview of your appliance's accessories and how to use them.

| | Use | Order number |
|---|---|---|
| Water inlet hose extension | Extend the water inlet hose for cold water or AquaStop (approx. 2.50 m). | WZ10131 |
| Fixing brackets | Improves the stability of the appliance. | WX975600 |
| Longer water inlet hose | Replace the standard water inlet hose with a longer hose (2.20 m). | 00353925 |
| Elbow | Secure the water outlet hose in place. | 00655300 |
| Liquid detergent insert | Measure liquid detergent. | 00637516 |

# Before using for the first time

Prepare the appliance for use.

## Starting an empty washing cycle

Your appliance was inspected thoroughly before leaving the factory. To remove any residual water, run the first wash cycle without any laundry.

**Note:** Please read the information in the "Safety" → *Page 4* and "Preventing material damage" → *Page 11* sections to ensure that you use the appliance safely.

1. Turn the programme selector to **Cotton 90°**.

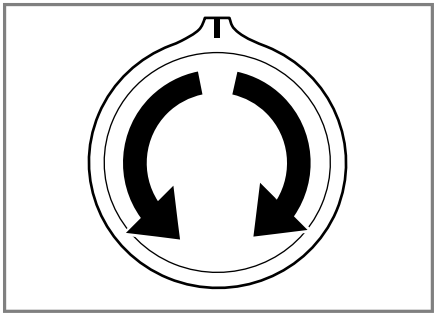

2. Close the door.

3. Pull out the detergent drawer.

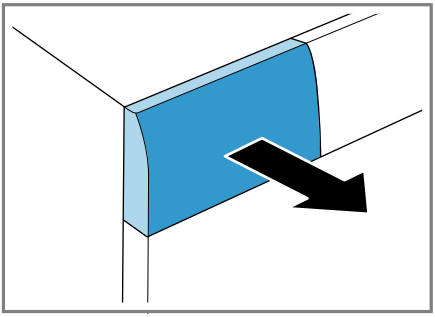

4. Pour approx. 1 litre of tap water into compartment II.

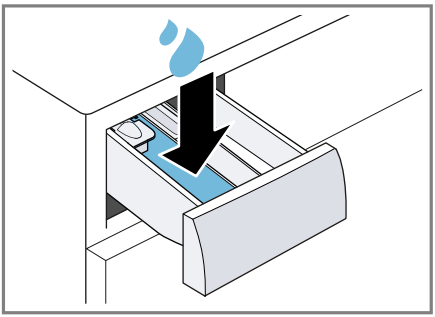

5. Pour washing powder into compartment II.

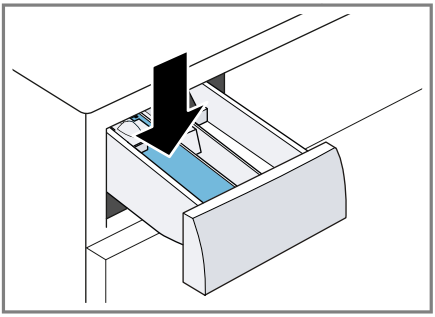

To prevent foaming, use only half of the amount of detergent recommended by the detergent manufacturer for light soiling. Do not use detergent suitable for woollens or delicates.

6. Push in the detergent drawer.

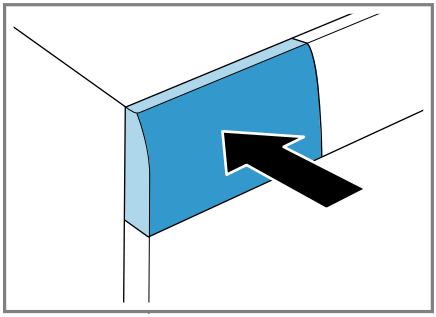

7. Press ▷II to start the programme.
✔ The display shows the remaining programme duration.
✔ After the programme has ended, the display shows: "End".
8. Start the first wash cycle or set the programme selector to **Off** ○ to switch off the appliance.
→ *"Basic operation", Page 32*

# Laundry

You can wash all items that the manufacturer has marked as machine-washable on the care label and fabrics made from hand-washable wool using your appliance.

## Preparing the laundry

**ATTENTION!**
Objects remaining in the laundry may damage the laundry and the drum.
▸ Remove all items from any pockets in your laundry before using the appliance.

▸ To protect your appliance and the laundry, prepare the laundry beforehand.
– Empty all pockets
– Brush sand out of all collars and pockets

- Close bed covers and cushion covers
- Close all zips, Velcro fasteners, hooks and eyes
- Tie cloth belts and apron strings together or use a mesh laundry bag
- Remove curtain hooks and lead strips or use a mesh laundry bag
- Use a mesh laundry bag for small items of laundry such as children's socks
- Separate items of laundry and shake them out
- Wash large and small items of laundry together
- Dab fresh stains with soapy water (do not rub them)
- Some stubborn or dried-in stains can be removed by washing several times

## Sorting laundry

**Note:** Please read the information in the "Safety" → *Page 4* and "Preventing material damage" → *Page 11* sections to ensure that you use the appliance safely.

▸ To improve washing results and prevent discolouration, sort the laundry according to the following criteria before washing.
  - Type of fabric and fibre type
  - Whites
  - Colours
    Wash new coloured items separately the first time you wash them.
  - "Soiling" → *Page 29*
  - "Care symbols on the care labels" → *Page 29*

## Degrees of soiling

| Degree of soiling | Soiling | Examples |
|---|---|---|
| Light | ■ No dirt or stains are visible<br>■ Laundry has absorbed odours | Light summer clothing or sports clothing that has been worn for a just a few hours |
| Normal | Dirt or light stains are visible | ■ T-shirts, shirts or blouses are sweat-soaked or have been worn a few times<br>■ Towels or bedding that has been used for up to one week |
| Heavy | Dirt or stains are clearly visible | Tea towels, baby items or work clothing |

## Care symbols on the care labels

The symbols indicate the recommended programme and the numbers in the symbols indicate the maximum recommended washing temperature.

| Symbol | Washing process | Recommended programme |
|---|---|---|
| 95 60 40 30 | Normal | Cottons |
| 60 40 30 | Gentle | Easy Care |

| Symbol | Washing process | Recommended programme |
|---|---|---|
| 40 30 | Particularly gentle | Delicates/Silk for washing by hand |
| | Hand wash | Wool |
| | Not suitable for machine-washing | – |

**Tip:** You can find more information about care symbols at www.ginetex.ch.

# Detergents and care products

You can protect your appliance and your laundry by selecting and using the correct detergents and care products. You can use all detergents and care products which are suitable for domestic washing machines.

**Note:** Please read the information in the "Safety" → *Page 4* and "Preventing material damage" → *Page 11* sections to ensure that you use the appliance safely.

The manufacturer's instructions for use and dosage can be found on the packaging.

**Notes**

- Only use liquid detergents that are self-flowing
- Do not mix different liquid detergents
- Do not mix detergent and fabric softener
- Do not use products which have developed a top layer or are highly congealed
- Do not use products containing solvents, caustic agents or volatile substances (e.g. bleach)
- Use dyes sparingly as salt may damage stainless steel
- Do not use bleaching agents in the appliance

## Detergent recommendation

This information helps you to choose the right detergent for your fabrics.

| Detergent | Fabrics | Programme | Temperature |
|---|---|---|---|
| Standard detergent with optical brighteners | Heat-resistant white fabrics made from cotton or linen | Cottons | From cold up to 90 °C |
| Detergent for colours without bleach or optical brighteners | Coloured fabrics made from linen or cotton | Cottons | From cold up to 60 °C |
| Detergent for colours/delicates without optical brighteners | Coloured fabrics made from easy-care fibres or synthetic materials | Easy Care | From cold up to 60 °C |
| Detergent for delicates | Delicate fabrics made from silk or viscose | Delicates/Silk | From cold up to 40 °C |
| Detergent for woollens | Wool | Wool | From cold up to 40 °C |

**Tip:** Visit www.cleanright.eu to find further information on detergents, care products and cleaning agents for domestic use.

## Detergent dosage

Use the correct detergent dosage to achieve optimal washing results and save resources.
The detergent dosage depends on:
- The amount of laundry
- Degree of soiling
- Water hardness
  You can find out how hard your water is from your local water company or measure it yourself using a water hardness tester.

**Water hardness**

| Hardness range | Total hardness in mmol/l | German degrees in °dH |
|---|---|---|
| soft (I) | 0–1.5 | 0–8.4 |
| medium (II) | 1.5– 2.5 | 8.4–14 |
| hard (III) | over 2.5 | over 14 |

**Example of a manufacturer's instructions for detergent**
These example values refer to a standard load of 4–5 kg.

| Soiling | Light | Normal | Heavy |
|---|---|---|---|
| Water hardness: Soft/medium | 40 ml | 55 ml | 80 ml |
| Water hardness: Hard/very hard | 55 ml | 80 ml | 105 ml |

The dosages can be found on the manufacturer's packaging.
- Adjust the dosage to the actual load.

# Basic operation

You can find out everything you need to know about operating your appliance here.

## Switching on the appliance

▸ Turn the programme selector to a programme.

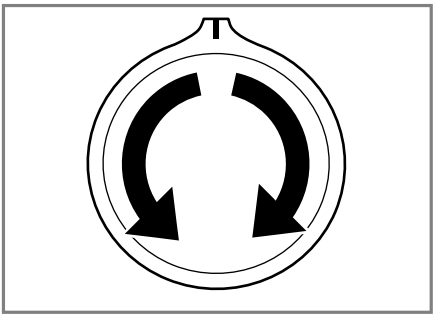

## Setting a programme

1. Set the programme selector to the required "programme" → *Page 24*.

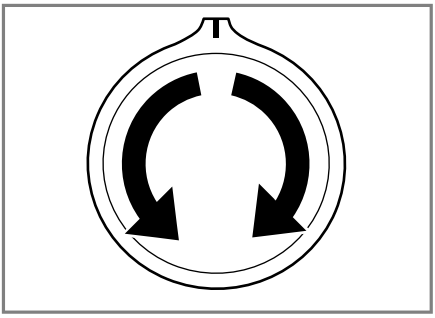

2. If necessary, "adjust the programme settings" → *Page 32*.

## Adjusting the programme settings

Depending on the programme and programme progress, you can adjust or activate/deactivate the settings.

**Note:** Overview of all programme settings:
→ *"Buttons", Page 23*

**Requirement:** A programme has been set.

▸ Adjust the programme settings.
The programme settings are not saved permanently for the programme.

## Loading laundry

**Notes**

- Please read the information in the "Safety" → *Page 4* and "Preventing material damage" → *Page 11* sections to ensure that you use the appliance safely.
- To prevent creasing, take note of the maximum load for the relevant "programme" → *Page 24*.

**Requirement:** Prepare and sort the laundry.
→ *"Laundry", Page 28*

1. Open the door.

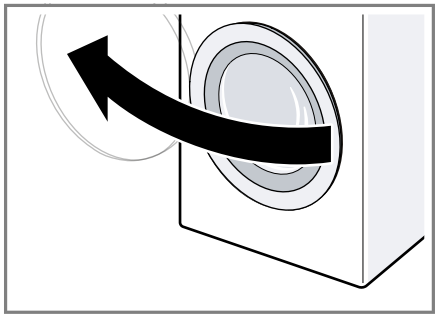

2. Ensure that the drum is empty.
3. Separate the laundry and place it in the drum.

4. **Note:** Ensure that there is no laundry trapped in the door.
   Close the door.

## Using a measuring aid for liquid detergent

If you order the measuring aid as an accessory, you must use the measuring aid.

1. Press down on the insert and remove the detergent drawer.

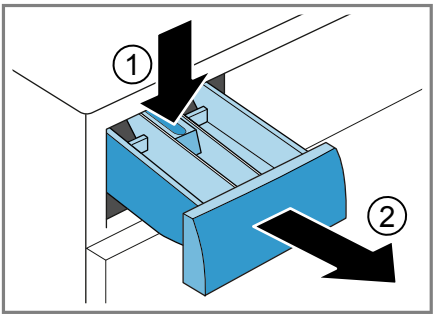


2. Insert the measuring aid.

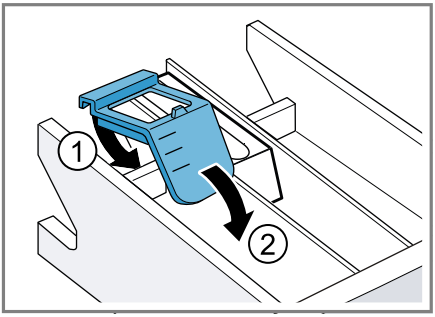


3. Insert the detergent drawer.

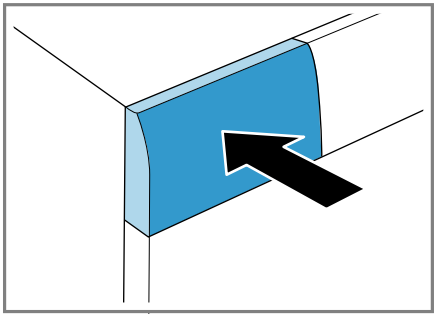

## Adding detergent and care product

**Notes**

- Please read the information in the "Safety" → *Page 4* and "Preventing material damage" → *Page 11* sections to ensure that you use the appliance safely.
- Do not use the measuring aid for liquid detergent for gel detergents, washing powder, or if Prewash or "Ready in" time are activated.

**Requirement:** Find out the optimum dosage for "detergent and care product." → *Page 30*

1. Pull out the detergent drawer.
2. Pour in detergent.
   → *"Detergent drawer", Page 20*
3. If required, add the care product.
4. Push in the detergent drawer.

## Starting the programme

**Note:** If you want to change the time until the programme ends, set the "Ready in" time first.

- ▸ Press ▷II .
- ✔ The drum rotates and load detection takes place. This can take up to 2 minutes, after which water enters the drum.

- ✔ The display shows either the programme duration or the "Ready in" time.
- ✔ After the programme has ended, the display shows: "End".

## Adjusting the "Ready in" time before the programme starts

You can readjust the selected "Ready in" time before the programme starts.

1. Press ▷II .
2. Press ◷ repeatedly until the display indicates the desired "Ready in" time.
3. Press ▷II .

## Soaking laundry

You can soak the laundry before washing in the appliance by pausing the programme.

**Note:** No additional detergent is required. The washing solution is then used for washing.

1. Start the programme.
2. To pause the programme, after approx. 10 minutes, press ▷II .
3. To resume the programme, after the desired soaking time, press ▷II .

## Adding laundry

**Note:** Please read the information in the "Safety" → *Page 4* and "Preventing material damage" → *Page 11* sections to ensure that you use the appliance safely.

1. Press ▷II .

   The appliance is paused and checks whether it is possible to add or remove laundry. Take note of the programme status.
2. Add or remove laundry.
3. Close the door.
4. Press ▷II .

## Cancelling the programme

Once the programme has started, you can cancel it at any time.

**Note:** Please read the information in the "Safety" → *Page 4* and "Preventing material damage" → *Page 11* sections to ensure that you use the appliance safely.

1. Press ▷II .
2. Open the door.

   The appliance door remains locked for safety reasons if the temperature and water levels are high.
   - – If the temperature is high, start the **Rinse** programme.
   - – If the water level is high: Start the **Spin** or **Drain** programme.
3. Remove the laundry.

## Resuming the programme when the programme status is Rinse Hold

1. Set the **Spin** or **Drain** programme.
2. Press ▷II .

## Unloading the laundry

**Note:** Please read the information in the "Safety" → *Page 4* and "Preventing material damage" → *Page 11* sections to ensure that you use the appliance safely.

1. Open the door.

2. Remove the laundry.

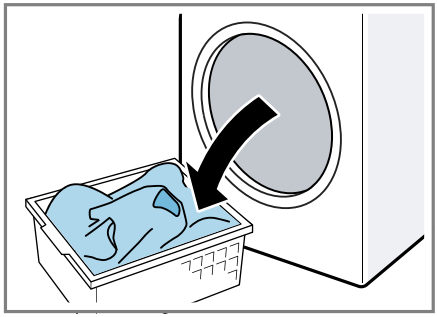

## Switching off the appliance

1. Turn the programme selector to **Off** ○.

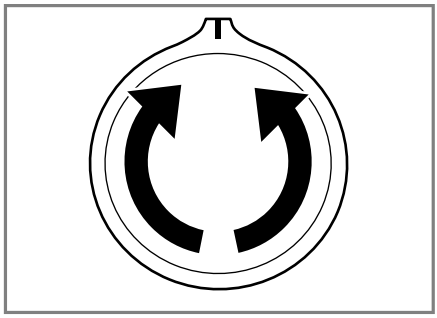

2. Turn off the tap.
3. Wipe the rubber gasket dry and remove any foreign objects.

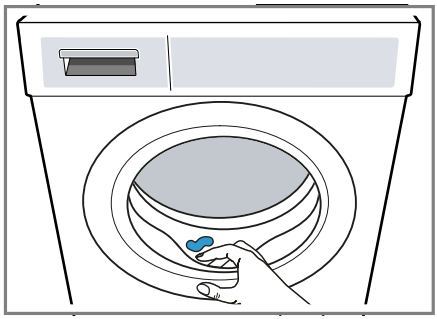

4. Leave the door and detergent drawer open so that residual water can evaporate.

# Childproof lock

Secure your appliance against being operated unintentionally using the controls.

## Activating the childproof lock

- ▸ Press and hold the two **3 sec.** buttons for approx. 3 seconds.
- ✔ The display shows .
- ✔ The controls are locked.
- ✔ The childproof lock remains active even after the appliance has been switched off.

## Deactivating the childproof lock

**Requirement:** To deactivate the childproof lock, the appliance must be switched on.

- ▸ Press and hold the two **3 sec.** buttons for approx. 3 seconds.

  So that the programme currently running is not cancelled, the programme selector must be set to the initial programme.
- ✔ goes out in the display.

# Basic settings

You can configure the appliance to meet your needs.

## Overview of the basic settings

Below is an overview of the basic settings on your appliance.

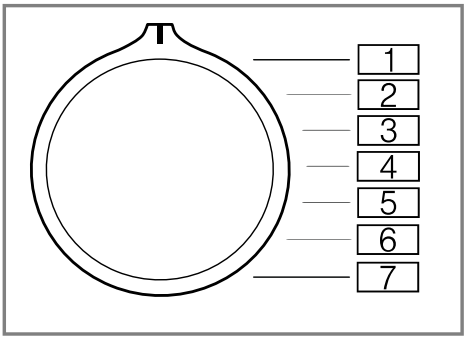


| Basic setting | Programme position | Value | Description |
|---|---|---|---|
| End signal | 2 | 0 (off)<br>1 (quiet)<br>2 (medium)<br>3 (loud)<br>4 (very loud) | Set the volume of the signal at the end of the programme. |
| Button signal | 3 | 0 (off)<br>1 (quiet)<br>2 (medium)<br>3 (loud)<br>4 (very loud) | The volume of the audible signal emitted when the buttons are pressed. |

## Changing the basic settings

1. Set the programme selector to position 1.

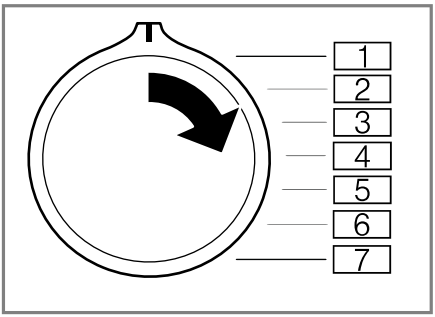


2. Press ▷II and, at the same time, turn the programme selector to position 2.
✔ The display shows the current value.
3. Set the programme selector to the required position.
→ *"Overview of the basic settings", Page 36*
4. To change the value, press ◷ .
5. To save the changes, switch off the appliance.

# Cleaning and servicing

To keep your appliance working efficiently for a long time, it is important to clean and maintain it carefully.

## Tips on appliance care

Follow the tips for appliance care to ensure your appliance works correctly in the long term.

| | |
|---|---|
| Wipe down the housing and the control panel with nothing but water and a damp cloth. | The appliance parts remain clean and hygienic. |
| Remove all detergent residue, spray residue or other residues immediately. | Fresh deposits are easier to remove without leaving any residue. |
| Keep the appliance door and detergent drawer open after use. | This allows the residual water to dry, reducing odours in the appliance. |

## Cleaning the drum

If you often wash at a washing temperature of 40 °C and lower or the appliance has not been used for a long period, clean the drum.

**⚠ CAUTION**
**Risk of injury!**
Permanently washing at low temperatures and a lack of ventilation for the appliance may damage the drum and cause injury.
- ▸ Regularly run a programme for cleaning the drum or wash at temperatures of at least 60 °C.
- ▸ Leave the appliance to dry after every operation with the door open, and leave the detergent drawer to dry.

- ▸ Run the **Cotton 90°** programme without laundry.
  Add washing powder.

## Cleaning the detergent drawer

**Note:** Please read the information in the "Safety" → *Page 4* and "Preventing material damage" → *Page 11* sections to ensure that you use the appliance safely.

1. Pull out the detergent drawer.

2. Press down on the insert and remove the detergent drawer.

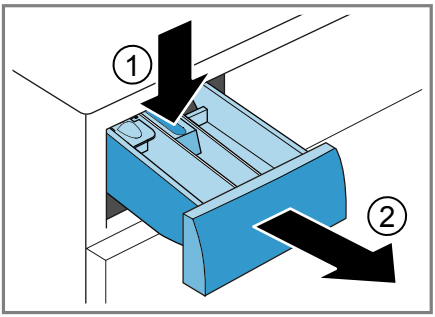


3. Press out the insert upwards from below.

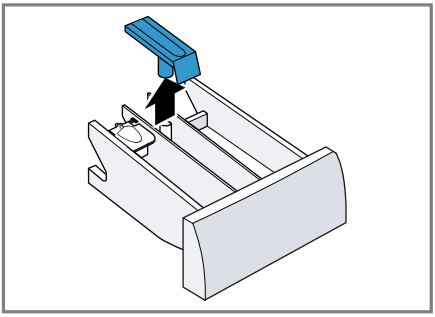

4. Clean the detergent drawer and insert with water and a brush, and then dry them.

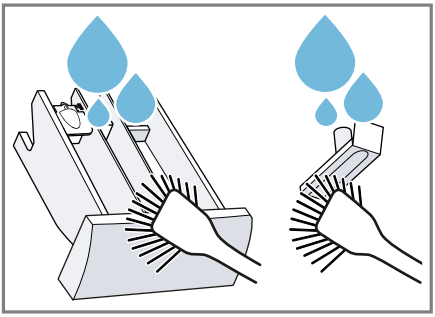

5. Fit the insert and lock it into place.

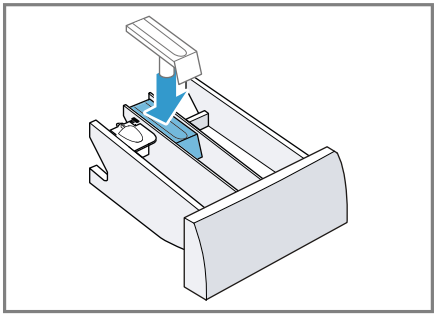

6. Cleaning the opening for the detergent drawer.

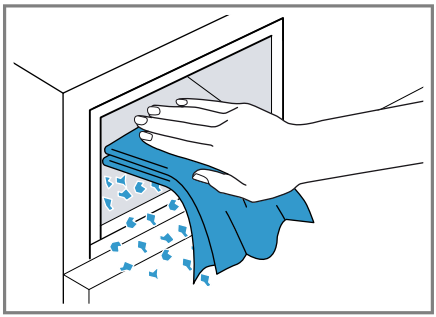

7. Push in the detergent drawer.

## Descaling

If you add detergent correctly, you do not need to descale your appliance. If you still wish to use descaler, follow the manufacturer's instructions for use.

**ATTENTION!**
The use of unsuitable descaling agents, e.g. for coffee machines, may damage the appliance.

- For this appliance, only use descaling agents that are available from the manufacturer's website or our after-sales service.

## Cleaning the drain pump

Clean the drain pump in the event of faults, e.g. blockages or rattling noises.

### Emptying the drain pump

**Note:** Please read the information in the "Safety" → *Page 4* and "Preventing material damage" → *Page 11* sections to ensure that you use the appliance safely.

1. Turn off the water tap.
2. Switch off the device.
3. Disconnect the appliance's mains plug from the power supply.
4. Open the maintenance flap.

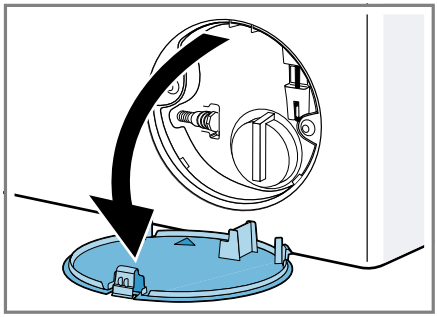

5. Remove the maintenance flap.

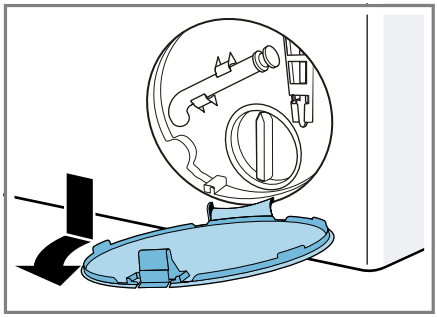

6. Slide a receptacle under the opening.

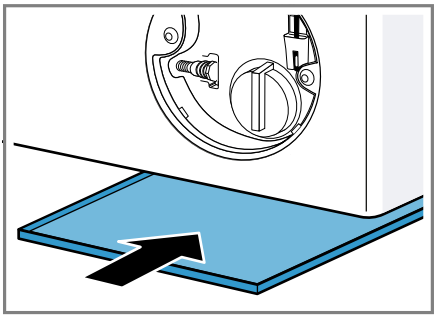

7. Take the drain hose out of the holder.

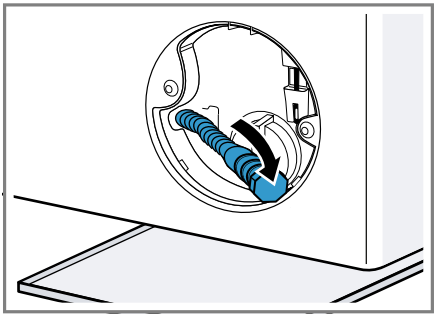

8. ⚠ **CAUTION - Risk of scalding!**
When you wash at high temperatures, the detergent solution gets hot.
► Do not touch the hot detergent solution.
To allow the detergent solution to flow out into the container, remove the sealing cap.

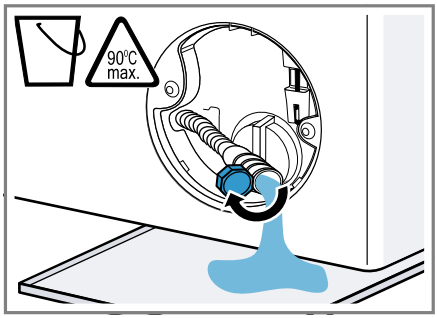


9. Firmly press on the sealing cap.

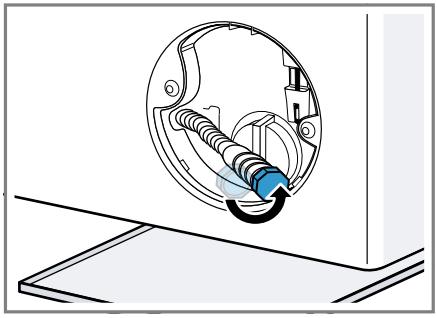

10. Insert the drain hose into the holder.

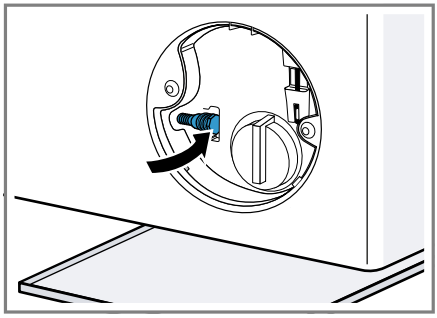

## Cleaning the drain pump

**Note:** Please read the information in the "Safety" → *Page 4* and "Preventing material damage" → *Page 11* sections to ensure that you use the appliance safely.

**Requirement:** "The drain pump is empty." → *Page 39*

1. Since water may remain in the drain pump, remove the pump cap carefully.

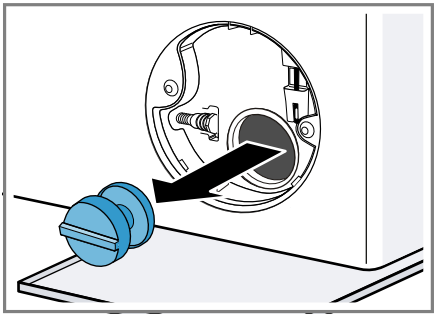

2. Clean the interior, the thread on the pump cap and the pump housing.
3. Make sure that the impeller in the drain pump can be rotated.
4. Insert the pump cap and screw it on.

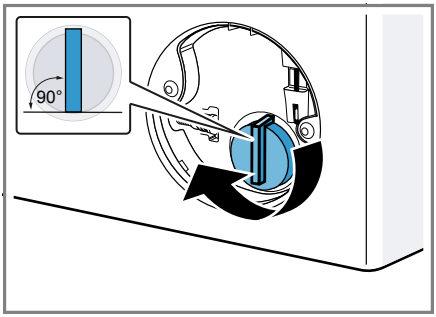


The handle on the pump cap must be in a vertical position.

5. Insert the maintenance flap and lock it into place.

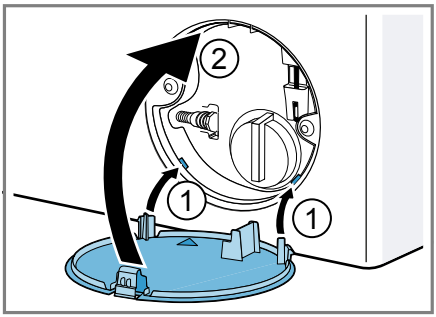


6. Close the maintenance flap.

**Before the next wash**

To prevent unused detergent from flowing straight into the outlet in the next wash, run the **Drain** programme after you have emptied the drain pump.

1. Turn on the tap.
2. Insert the mains plug.
3. Switch on the appliance.
4. Pour 1 litre of water into compartment II.
5. Start the **Drain** programme.

## Cleaning the water outlet hose at the siphon

If the water outlet hose at the siphon is dirty or the detergent solution is not being pumped out, you must clean these.

1. Switch off the appliance.
2. Disconnect the appliance's mains plug from the power supply.
3. Loosen the hose clamp and carefully remove the water outlet hose.

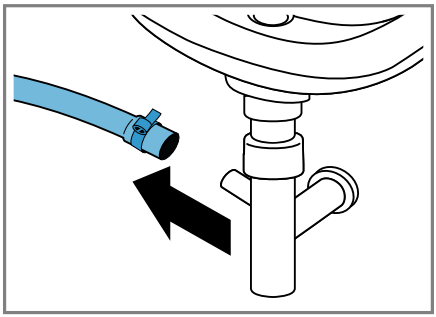

Residual water may leak out.

4. Clean the water outlet hose and siphon connecting piece.

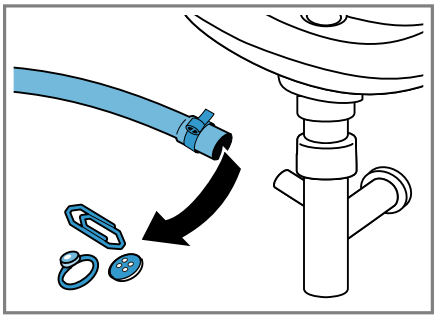

5. Reattach the water outlet hose and secure the connection point using the hose clamp.

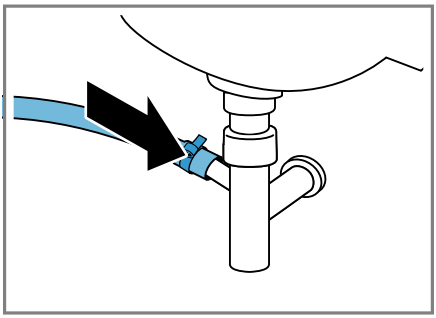

## Clean the water inlet filters.

Clean the filter in the water inlet in the event of blockages or if the water pressure is too low.

### Emptying the water inlet hose

1. Turn off the tap.
2. Set a programme, except for **Rinse**, **Spin** or **Drain**.
3. Start the programme and leave it to run for approx. 40 seconds.
4. Switch off the appliance.
5. Disconnect the appliance's mains plug from the power supply.

### Cleaning the filter on the tap

**Note:** Please read the information in the "Safety" → *Page 4* and "Preventing material damage" → *Page 11* sections to ensure that you use the appliance safely.

**Requirement:** The water inlet hose is empty.

1. Remove the water inlet hose from the tap.

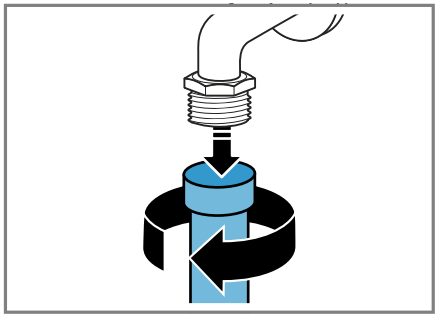

2. Clean the filter with a small brush.

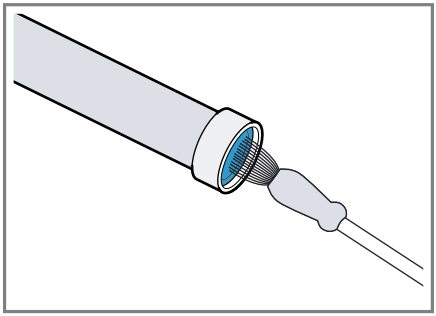

3. Connect the water inlet hose and check for leaks.

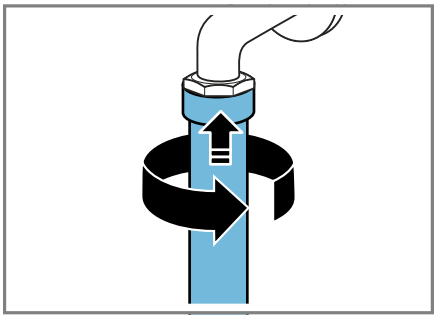

### Cleaning the filter on the appliance

**Note:** Please read the information in the "Safety" → *Page 4* and "Preventing material damage" → *Page 11* sections to ensure that you use the appliance safely.

**Requirement:** The water inlet hose is empty.
→ *"Emptying the water inlet hose", Page 42*

1. Disconnect the hose from the rear of the appliance.

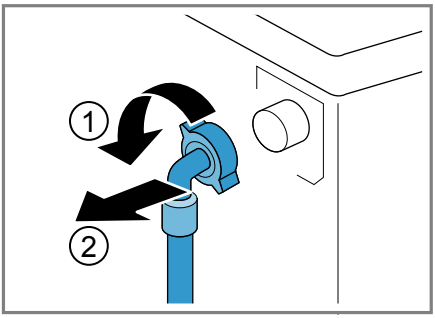


2. Use pliers to remove the filter.

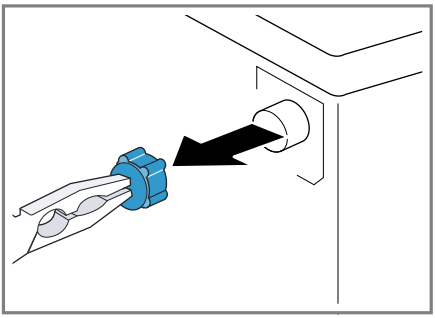

3. Clean the filter with a small brush.

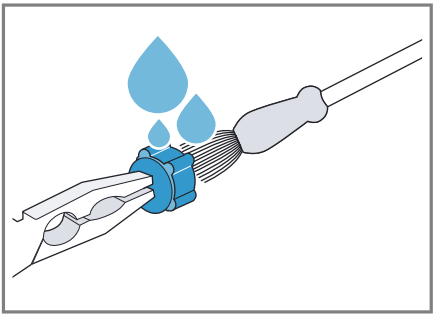

4. Reinsert the filter.

5. Connect the hose and check for leaks.

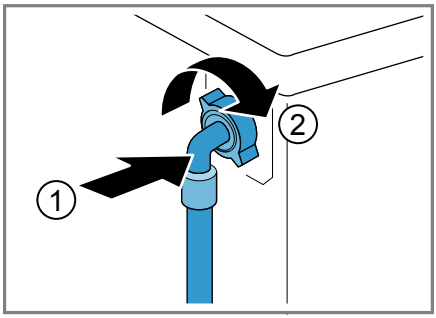

# Troubleshooting

You can rectify minor faults on your appliance yourself. Read the troubleshooting information before contacting after-sales service. This will avoid unnecessary costs.

**⚠ WARNING**
**Risk of electric shock!**
Improper repairs are dangerous.
- ▸ Repairs to the appliance should only be carried out by trained specialist staff.
- ▸ Only use genuine spare parts when repairing the appliance.
- ▸ If the power cord of this appliance is damaged, it must be replaced by the manufacturer, the manufacturer's Customer Service or a similarly qualified person in order to prevent any risk.

## Error code / Fault display / Signal

| Fault | Cause | troubleshooting |
|---|---|---|
| The display goes out and ▷II flashes. | Energy-saving mode is active | ▸ Press any button.<br>✔ The symbol lights up again. |
| "E:36 / -10" | Drain pipe or water outlet hose is blocked. | ▸ Clean the drain pipe and the water outlet hose. |
| | Drain pipe or water drain hose is caught or jammed. | ▸ Ensure that the drain pipe and water drain hose are not kinked or trapped. |
| | Drain pump is blocked. | ▸ → *"Cleaning the drain pump", Page 39* |
| | The water outlet hose is connected too high. | ▸ Install the water outlet hose at a maximum height of 1 metre. → *"Technical specifications", Page 55* |
| "E:36 / -25 / -26" | Drain pump is blocked. | ▸ → *"Cleaning the drain pump", Page 39* |
| "E:60 / -2B" | The unbalanced load detection system has interrupted the spin cycle because the laundry is unevenly distributed. | ▸ Redistribute the laundry in the drum.<br>**Note:** Where possible, mix large and small items in the drum. Different sized items of laundry distribute themselves better during the spin cycle. |
| 🚰 | The water pressure is low. | No remedial action possible. |
| | The filters in the water inflow are blocked. | ▸ "Clean the filters in the water inflow" → *Page 42*. |

| Fault | Cause | troubleshooting |
|---|---|---|
| 🚰 | The tap is turned off. | ▶ Turn on the tap. |
| | The water inlet hose is kinked or jammed. | ▶ Ensure that the water inlet hose is not kinked or jammed. |
| ⏱ lights up. | The temperature is too high. | ▶ Wait until the temperature has dropped.<br>▶ → *"Cancelling the programme", Page 34* |
| | Water level is too high. | ▶ Start the **Drain** programme. |
| | Laundry is caught in the door. | 1. Open the door again.<br>2. Remove any trapped laundry.<br>3. Close the door.<br>4. Press ▷II to start the programme. |
| ⏱ flashes. | Door is not closed. | 1. Close the door.<br>2. Press ▷II to start the programme. |
| All other error codes. | Malfunction | ▶ Call the after-sales service.<br>→ *"Customer Service", Page 53* |

## Malfunctions

| Fault | Cause | troubleshooting |
|---|---|---|
| The appliance is not working. | The mains plug of the power cord is not plugged in. | ▶ Connect the appliance to the power supply. |
| | The circuit breaker is faulty. | ▶ Check the circuit breaker in the fuse box. |
| | There has been a power cut. | ▶ Check whether the lighting in your kitchen or other appliances are working. |
| The programme does not start. | You have not pressed ▷II. | ▶ Press ▷II. |
| | Door is not closed. | 1. Close the door.<br>2. Press ▷II to start the programme. |
| | Childproof lock is activated. | ▶ → *"Deactivating the childproof lock", Page 35* |
| | ⏲ is activated. | ▶ Check whether ⏲ is activated.<br>→ *"Buttons", Page 23* |
| | Laundry is caught in the door. | 1. Open the door again.<br>2. Remove any trapped laundry.<br>3. Close the door.<br>4. Press ▷II to start the programme. |

| Fault | Cause | troubleshooting |
|---|---|---|
| The door cannot be opened. | – –– is activated. | ▶ Continue the programme by selecting **Spin** or **Drain** and pressing ▷II. → *"Resuming the programme when the programme status is Rinse Hold", Page 34* |
| | The temperature is too high. | ▶ Wait until the temperature has dropped.<br>▶ → *"Cancelling the programme", Page 34* |
| | Water level is too high. | ▶ Start the **Drain** programme. |
| | Power failure. | ▶ Open the door using the emergency release. → *"Emergency release", Page 51* |
| The water is not draining. | Drain pipe or water outlet hose is blocked. | ▶ Clean the drain pipe and the water outlet hose. |
| | Drain pipe or water drain hose is caught or jammed. | ▶ Ensure that the drain pipe and water drain hose are not kinked or trapped. |
| | Drain pump is blocked. | ▶ → *"Cleaning the drain pump", Page 39* |
| | – –– is activated. | ▶ Continue the programme by selecting **Spin** or **Drain** and pressing ▷II. → *"Resuming the programme when the programme status is Rinse Hold", Page 34* |
| | The water outlet hose is connected too high. | ▶ Install the water outlet hose at a maximum height of 1 metre. → *"Technical specifications", Page 55* |
| Water is not flowing in. Detergent is not being dispensed. | You have not pressed ▷II. | ▶ Press ▷II. |
| | The filters in the water inflow are blocked. | ▶ "Clean the filters in the water inflow" → *Page 42*. |
| | The tap is turned off. | ▶ Turn on the tap. |
| | The water inlet hose is kinked or jammed. | ▶ Ensure that the water inlet hose is not kinked or jammed. |

| Fault | Cause | troubleshooting |
|---|---|---|
| The spin cycle runs several times. | The unbalanced load detection system eliminates an imbalance by repeatedly redistributing the laundry. | ▶ Not a fault – no action required.<br>**Note:** When loading, where possible, place large and small items of laundry together in the drum. Different sized items of laundry distribute themselves better during the spin cycle. |
| The programme duration changes during the wash cycle. | The programme operation is optimised electronically. This may change the programme duration. | ▶ Not a fault – no action required. |
| | The unbalanced load detection system eliminates an imbalance by repeatedly redistributing the laundry. | ▶ Not a fault – no action required.<br>**Note:** When loading, where possible, place large and small items of laundry together in the drum. Different sized items of laundry distribute themselves better during the spin cycle. |
| | Foam detection system switches on a rinse cycle if foam build-up is too high. | ▶ Not a fault – no action required. |
| No water is visible in the drum. | Water is below the visible area. | ▶ Not a fault – no action required. |
| Drum jerks after the programme starts. | This is caused by an internal motor test. | ▶ Not a fault – no action required. |
| Residual water is present in the compartment ❀. | Insert in compartment ❀ is blocked. | ▶ → *"Cleaning the detergent drawer", Page 37* |
| Vibrations and movement of the appliance whilst spinning. | Appliance is not correctly aligned. | ▶ Aligning the appliance |
| | The appliance feet are not fixed. | ▶ Secure the appliance feet. Aligning the appliance |
| | Transit bolts have not been removed. | ▶ Removing the transit bolts |
| Drum does not turn, water does not flow in. | Load detection is active. | ▶ Not a fault – no action required.<br>**Note:** The load detection can take up to two minutes. |

| Fault | Cause | troubleshooting |
|---|---|---|
| Heavy foam build-up | Detergent dosage is too high. | ▶ Immediate measure: Mix one tablespoon of fabric softener with 0.5 litres of water and pour the mixture into the left-hand compartment (not for outdoor clothing, sportswear or items stuffed with down).<br>▶ Reduce the amount of detergent for the next washing cycle with the same load. |

## Noise

| Fault | Cause | troubleshooting |
|---|---|---|
| Rushing, hissing noise. | Water is flushed under pressure into the detergent drawer. | ▶ Not a fault – normal operating noise. |
| Loud noises during the spin cycle. | Appliance is not correctly aligned. | ▶ Aligning the appliance |
| | The appliance feet are not fixed. | ▶ Secure the appliance feet. Aligning the appliance |
| | Transit bolts have not been removed. | ▶ Removing the transit bolts |
| Banging noises, rattling in the drain pump. | Foreign bodies have got into the drain pump. | ▶ → *"Cleaning the drain pump", Page 39* |
| Slurping, rhythmical suction noise. | The drain pump is active, the detergent solution is pumped out. | ▶ Not a fault – normal operating noise. |

## Problem with results

| Fault | Cause | troubleshooting |
|---|---|---|
| Creasing. | The spin speed is too high. | ▶ The next time you run a wash cycle, set a lower spin speed. |
| | The load is too large. | ▶ The next time you run a wash cycle, reduce the amount of laundry being loaded. |
| | The wrong programme is selected for the type of fabric. | ▶ Select the programmes that are suitable for the type of fabric. → *"Programmes", Page 24* |

| Fault | Cause | troubleshooting |
|---|---|---|
| Detergent or fabric softener drips off the seal and collects on the door or in the seal fold. | Too much detergent/fabric softener in the detergent drawer. | ▶ When dosing liquid detergent and fabric softener, observe the marking in the detergent drawer and do not dose above this. |
| The spin result is not satisfactory. The laundry is too wet/too damp. | A low spin speed is selected. | ▶ The next time you run a wash cycle, set a higher spin speed.<br>▶ Start the **Spin** programme. |
| | The unbalanced load detection system has interrupted the spin cycle because the laundry is unevenly distributed. | ▶ Redistribute the laundry in the drum.<br>**Note:** Where possible, mix large and small items in the drum. Different sized items of laundry distribute themselves better during the spin cycle.<br>▶ Start the **Spin** programme. |
| Detergent residue on the damp washing. | Detergents may contain water-insoluble substances that deposit on the laundry. | ▶ Start the **Rinse** programme. |
| Detergent residue on the dry laundry. | Detergents may contain water-insoluble substances that deposit on the laundry. | ▶ Brush out the laundry after washing and drying. |

## Leakage

| Fault | Cause | troubleshooting |
|---|---|---|
| Water is leaking out at the water inlet hose. | Water inlet hose is not correctly/securely connected. | 1. Connect the water supply hose correctly. Connecting the water inlet hose<br>2. Tighten the screw connection. |
| Water is leaking out at the water outlet hose. | The water outlet hose is damaged. | ▶ Replace the damaged water outlet hose. |
| | Water outlet hose is not connected correctly. | ▶ Connect the water outlet hose correctly. Water outlet connection types |

## Odours

| Fault | Cause | troubleshooting |
|---|---|---|
| Odours have formed in the appliance. | Humidity and detergent residue may promote the formation of bacteria. | ▶ → *"Cleaning the drum", Page 37*<br>▶ If you are not using the appliance, leave the door and detergent drawer open so that residual water can evaporate. |

## Emergency release

To remove the laundry in the event of a power failure, for example, you can manually release the door.

### Releasing the door

**Requirement:** "The drain pump is empty." → *Page 39*

1. **ATTENTION!** Escaping water may cause material damage.
   ▶ Do not open the door if you can see water through the glass.

   Pull the emergency release downwards with a tool and release.

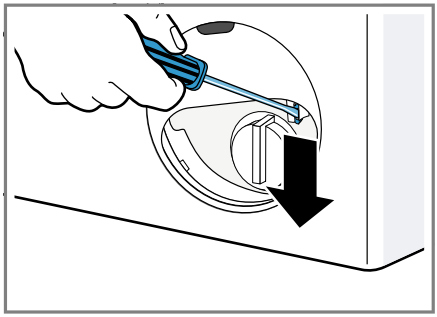

✔ The door lock is released.

2. Insert the maintenance flap and lock it into place.
3. Close the maintenance flap.

# Transportation, storage and disposal

You can find out here how to prepare your appliance for transportation and storage. You will also find out how to dispose of old appliances.

## Removing the appliance

1. Turn off the tap.
2. → *"Emptying the water inlet hose", Page 42*.
3. Switch off the appliance.
4. Unplug the appliance's mains plug.
5. Drain the remaining detergent solution.
   → *"Cleaning the drain pump", Page 39*
6. Detach the hoses.

## Inserting the transit bolts

Secure the appliance for transportation using transit bolts in order to prevent damage.

1. Remove the four cover caps.
   – If necessary, use a screwdriver to remove the cover caps.

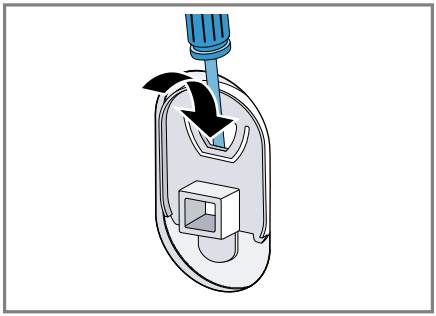

Keep the cover caps.

2. Insert the four sleeves.

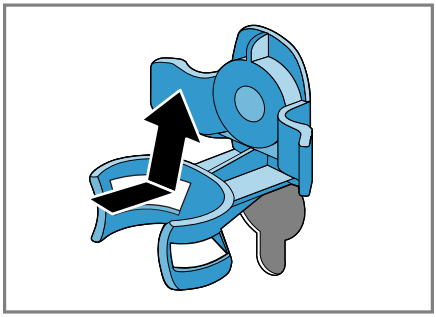

3. Insert all screws into the four transit bolts and tighten slightly.

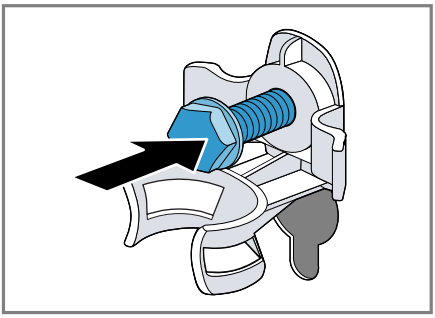

4. Insert the power cord into the holder ① and tighten all four screws for the transit bolts with a WAF 13 wrench ②.

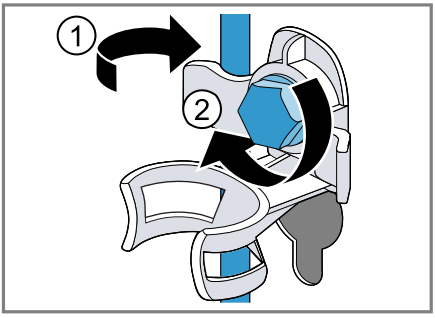


5. Insert the hose into holder.

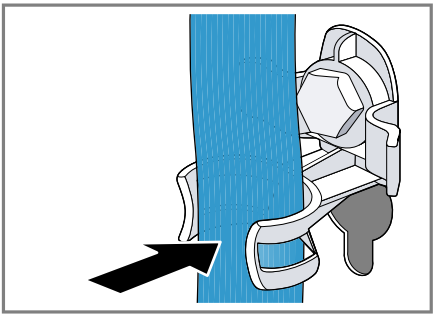

## Using the appliance again

1. Remove the transit bolts.
2. Pour approx. 1 litre of water into compartment II in the detergent drawer.
3. Start the **Drain** programme.

✔ The unused detergent cannot flow straight into the outlet during the next wash.

## Disposing of old appliance

Valuable raw materials can be re-used by recycling.

**⚠ WARNING**
**Risk of harm to health!**
Children can lock themselves in the appliance, thereby putting their lives at risk.

- ▸ Do not install the appliance behind a door as this may obstruct the appliance door or prevent it from opening.
- ▸ With redundant appliances, unplug the power cord. Then cut through the cord and damage the lock on the appliance door beyond repair so that the appliance door will no longer close.

1. Unplug the appliance from the mains.
2. Cut through the power cord.
3. Dispose of the appliance in an environmentally friendly manner.

This appliance is labelled in accordance with European Directive 2012/19/EU concerning used electrical and electronic appliances (waste electrical and electronic equipment - WEEE). The guideline determines the framework for the return and recycling of used appliances as applicable throughout the EU.

# Customer Service

If you have any queries on use, are unable to rectify faults on the appliance yourself or if your appliance needs to be repaired, contact Customer Service.
You can solve many problems yourself by consulting the information on troubleshooting in these instructions or on our website. If this is not the case, contact our after-sales service. We will always find an appropriate solution and try to avoid unnecessary visits being made by a Customer Service technician.
With any warranty claims, we will make sure that your appliance is repaired by trained after-sales technicians using genuine spare parts, including after the manufacturer's warranty has expired.
For safety reasons repairs to the appliance should only be carried out by trained specialist staff. The warranty claim becomes void if repairs or interventions have been carried out by persons not authorised by us for that purpose or if our appliances have been fitted with spare, supplementary or accessory parts that were not genuine parts and then resulted in a defect.
Function-relevant genuine spare parts according to the corresponding Ecodesign Order can be obtained from Customer Service for a period of at least 10 years from the date on which your appliance was placed on the market within the European Economic Area.

**Note:** Under the terms of the manufacturer's warranty the use of Customer Service is free of charge.

Detailed information on the warranty period and terms of warranty in your country is available from our after-sales service, your retailer or on our website.
If you contact Customer Service, you will require the product number (E-Nr.) and the production number (FD) of your appliance.
The contact details for Customer Service can be found in the enclosed Customer Service directory or on our website.

## Product number (E-Nr.) and production number (FD)

You can find the product number (E-Nr.) and the production number (FD) on the appliance's rating plate.
Depending on the model, the rating plate is located:

- On the inside of the door.
- On the inside of the maintenance flap.
- On the rear of the appliance.

Make a note of your appliance's details and the Customer Service telephone number to find them again quickly.

# Consumption values

The following information is provided in accordance with the EU Ecodesign Regulation. The values given for programs other than the **Eco 40-60** are indicative only and were determined in accordance with the applicable standard EN60456.

| Programme | Load (kg) | Programme duration (hr:min)[1] | Energy consumption (kWh/cycle)[1] | Water consumption (l/cycle)[1] | Maximum temperature (°C) 5 mins[1] | Spin speed (rpm)[1] | Residual moisture (%)[1] |
|---|---|---|---|---|---|---|---|
| Eco 40-60[2] | 7,0 | 3:20 | 1,048 | 58,0 | 45 | 1400 | 51 |
| Eco 40-60[2] | 3,5 | 2:38 | 0,584 | 43,0 | 38 | 1400 | 53 |
| Eco 40-60[2] | 2,0 | 2:33 | 0,292 | 30,0 | 24 | 1400 | 57 |
| Cotton 20 °C | 7,0 | 2:59 | 0,290 | 80,0 | 23 | 1400 | 53 |
| Cotton 40 °C | 7,0 | 2:59 | 1,050 | 80,0 | 44 | 1400 | 53 |
| Cotton 60 °C | 7,0 | 2:59 | 1,300 | 80,0 | 56 | 1400 | 53 |
| Cotton + Prewash 40 °C | 7,0 | 3:29 | 1,070 | 80,0 | 44 | 1400 | 53 |
| Easy Care 40 °C | 4,0 | 2:29 | 0,770 | 63,0 | 43 | 1200 | 30 |
| Mix 40 °C | 4,0 | 1:00 | 0,620 | 44,0 | 41 | 1400 | 55 |
| Wool 30 °C | 2,0 | 0:41 | 0,220 | 40,0 | 22 | 800 | 25 |

[1] Due to the influence of water pressure, hardness and inlet temperature, ambient temperature, type, amount and soiling of laundry, detergent used, fluctuations in the power supply and the selected additional functions, the actual values may deviate from the stated values.

[2] Test programme in accordance with the EU Ecodesign Directive and the EU Energy Labelling Regulation with cold water (15 °C).

# Technical specifications

Facts and figures for your appliance can be found here.

| | |
|---|---|
| Appliance height | 85,0 cm |
| Appliance width | 60,0 cm |
| Appliance depth | 55,0 cm |
| Weight | 65 - 70 kg[1] |

[1] Depending on the appliance specifications

| | |
|---|---|
| Maximum load capacity | 7 kg |
| Mains voltage | 220 - 240 V, 50 Hz |
| Minimum installation protection | 10 A |
| Rated power | 2300 W |
| Power consumption | ■ Off mode: 0,12 W<br>■ Left-on mode: 0,50 W |

[1] Depending on the appliance specifications

| | |
|---|---|
| Water pressure | ■ Minimum: 100 kPa (1 bar)<br>■ Maximum: 1000 kPa (10 bar) |
| Length of the water inlet hose | 150 cm |
| Length of the water outlet hose | 150 cm |
| Length of the power cord | 210 cm |
| Max. draining height | 100 cm |
| Minimum draining height | 60 cm |

[1] Depending on the appliance specifications

More information about your model can be found online at https://energylabel.bsh-group.com[1]. This web address is linked to the official EU EPREL product database. At the time of printing its web address had not yet been published. Please then follow the instructions on searching for models. The model identifier is made up of the characters before the slash in the product number (E-Nr.) on the rating plate. Alternatively you can also find the model identifier in the first line of the EU energy label.

[1] Only applies to countries in the European Economic Area

**BSH Hausgeräte GmbH**
Carl-Wery-Straße 34
81739 München
GERMANY
www.siemens-home.bsh-group.com

Manufactured by BSH Hausgeräte GmbH under Trademark License of Siemens AG

**9001543848** (000717)
en